TOP VIEW

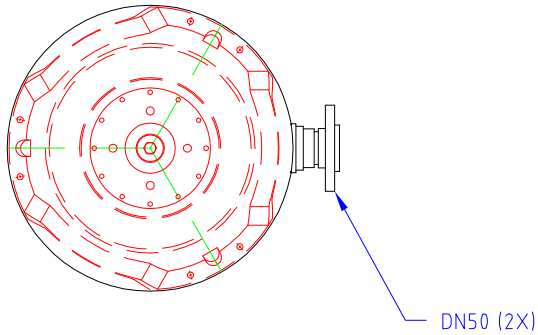

OFFSET VIEW

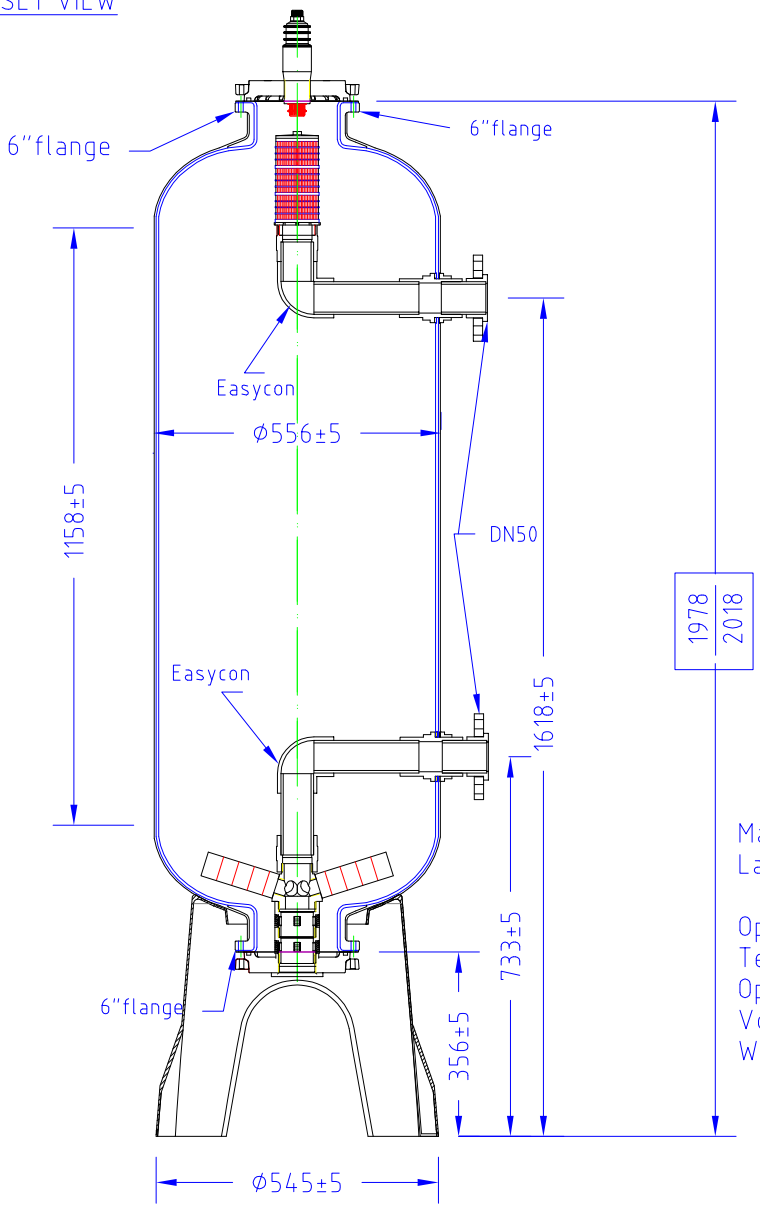

Material Inner shell	: PE
Laminate	: Blue epoxy - glass laminate
Operating pressure	: min 0 bar - max 10 bar
Testing pressure	: 11 bar
Operating temperature	: min 1°C - max 65°C
Volume tank	: ±310 liter / [ ] l
Weight empty tank	: ±43 kg

APPROVAL DRAWING	Location	REVISION DESCRIPTION	Approved	Date

Customer : /	Pentair Water Industriepark Wolfstee Toekomstlaan 30 HERENTALS BELGIUM	Article :	Scale : none
Quantity ordered : /		Cad filename : C-2166-S611	Date : 24 November 2014
		Model filename :	Drawn : Arnaud Cuylen
		Remarks : Boxed dims. are critical for Q.A.	Approved : GJ./SVC.
Delivery date :		Material : see table	Projection : A 4
Approval signature by customer : / Approval date :	Description : COMP BL,FLNG 6"T+B,3-L base		Drawing number : C-2166-S611

This drawing is the absolute property of Pentair Water Belgium. It may not be reproduced in any form without the written permission of Pentair Water Belgium.