USE AND MAINTENANCE MANUAL
V250

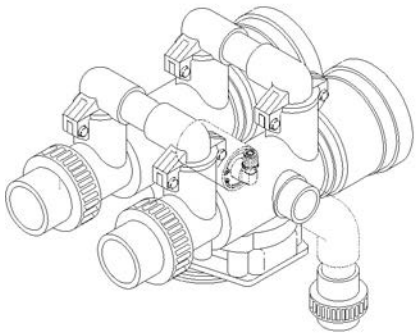

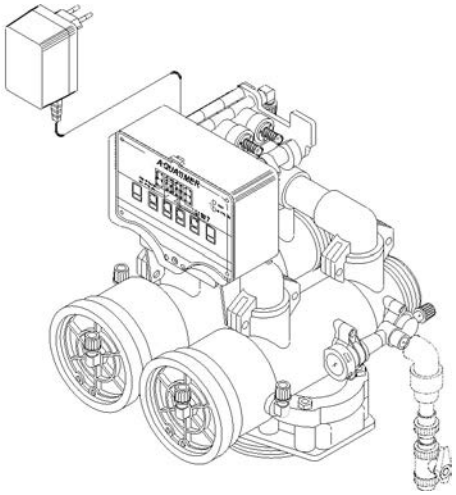

DOCUMENT	REVISION	REVISION NOTE	DATE
MAN0035	DRAFT		

INDICE

GENERAL CHARACTERISTICS

The “V250” valves represent an essential element for the realisation of systems of various types and for varying uses

a) SOFTENING (decalcification) single, duplex or on more columns for domestic or industrial use

The valves are made from materials which guarantee the maximum durability and quality.
The valves are available with a wide range of timers, for the control of all operative phases of service and regeneration. These sophisticated electronic timers in the various models, by time, by volume, by volume/time, allow for the programming of all the operative phases of water treatment systems covered by the types specified above.

TECHNICAL SPECIFICATIONS

Running pressure	: 1.5 - 6 bar
Running load	: 21 mc/h
Countercurrent rinse load	: 12 mc/h
Slow rinse load	: 300 - 1000 l/h
Equicurrent fast rinse load	: 14 mc/h
Static resistance to pressure	: 22 bar
Max. quantity regenerable resin	: 500 Liri
Running temperature	: 5 - 40° c
Basic materials of principal components	: ABS + fv
Entry/Exit attachments	: 2” ¼ gas male

RUNNING SERVICE

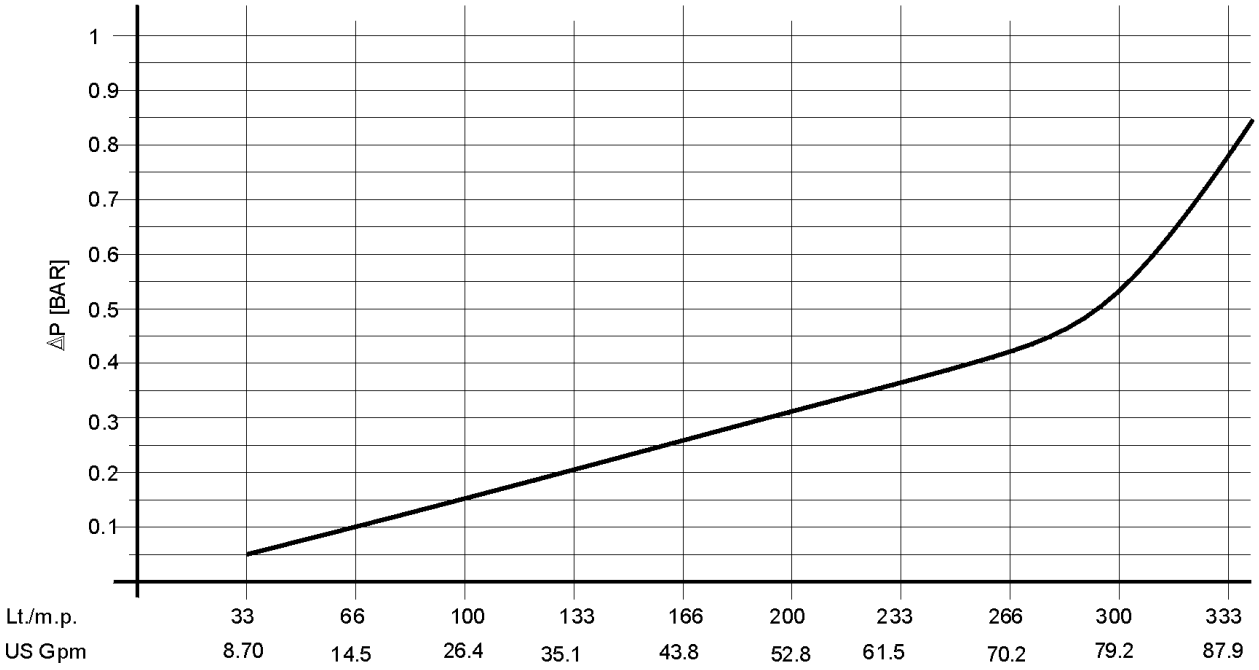

RINSE LOAD IN COUNTERCURRENT

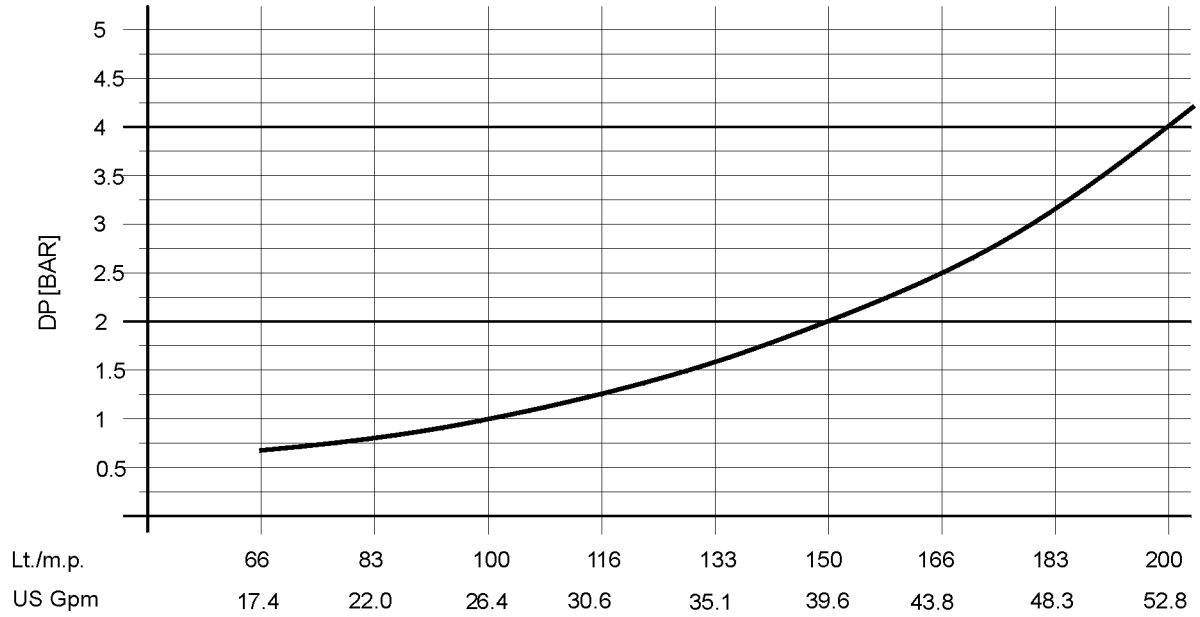

FAST RINSE LOAD

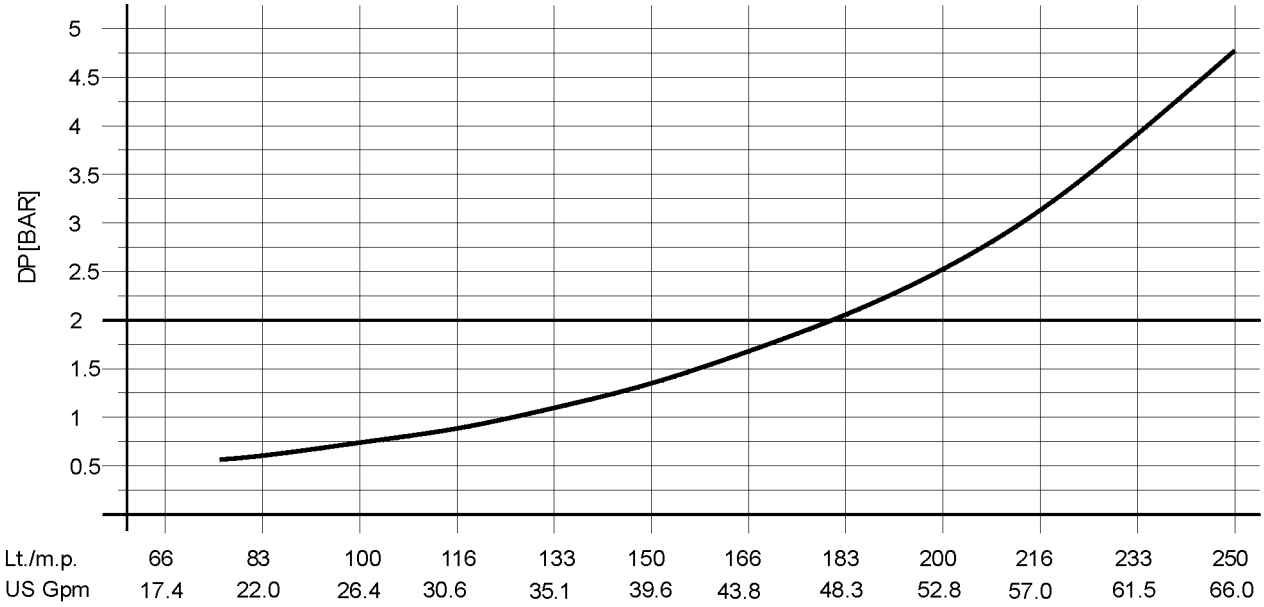

DIMENSIONS

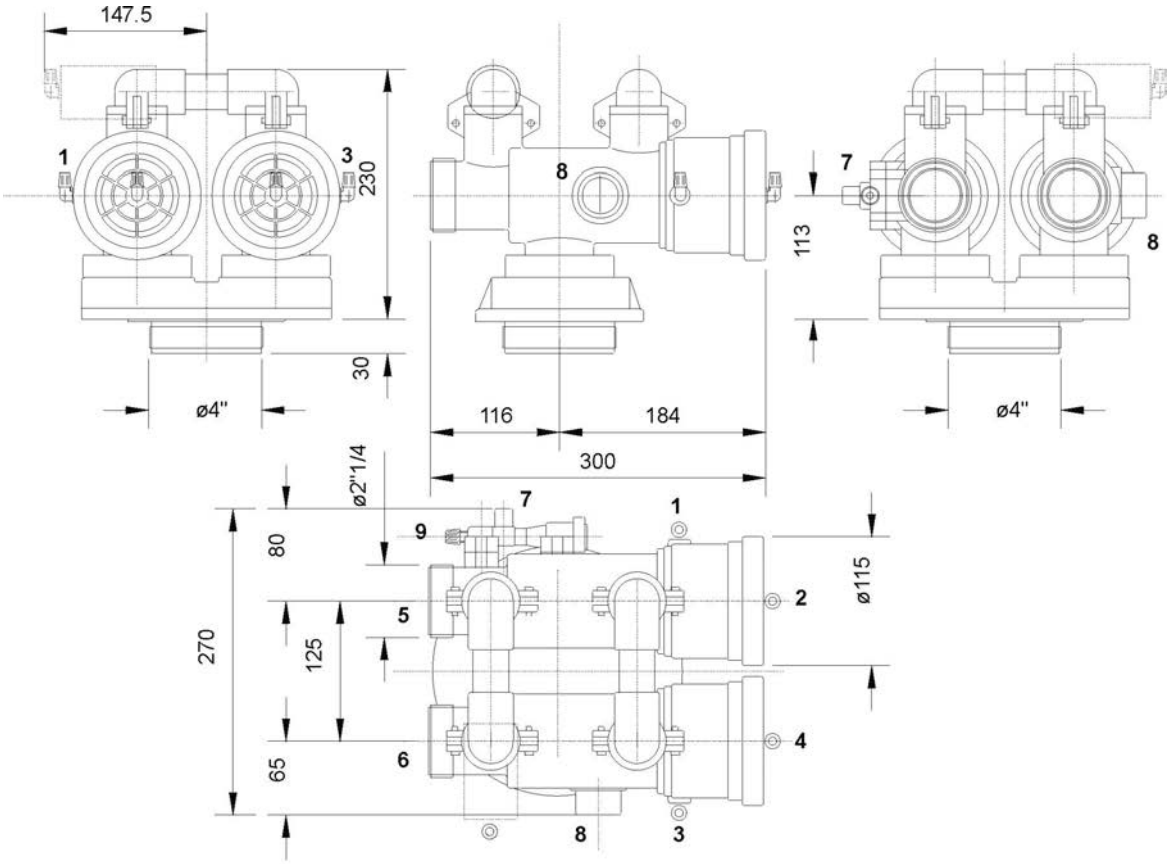

1 CONNECTION FOR OPENING CILINDRO ENTRATA
2 CONNECTION FOR CLOSURE ENTRY CYLINDER
3 CONNECTION FOR OPENING EXIT CYLINDER
4 CONNECTION FOR CLOSURE OF EXIT CYLINDER
5 ENTRY
6 EXIT
7 SUCTION CONNECTION
8 DRAIN CONNECTION DIAM. ISO 40 MASCHIO
9 FLUID CONNECTION OF PILOT TIMER CONTROL

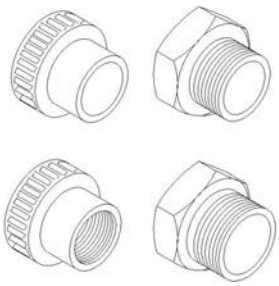

494-A/05 KIT CONN. PVC 2"1/4 G.F. ISO 50 F. INC.
494-D/05 KIT CONN. PVC/ BRASS 2"1/4 G.F./1"1/2 G.M.
494-E/05 KIT CONN. PVC/ BRASS 2"1/4 G.F./2" G.M.
494-G/05 KIT CONN. BRASS 2"1/4 G.F./2" G.M.
494-P/05 KIT CONN. BRASS 2"1/4 G.F./1"1/2 G.F.
494-H/05 KIT CONN. PVC 2"1/4 G.F./1"1/2 G.M.

FLOW DIAGRAM
SERVIZIO / SERVICE

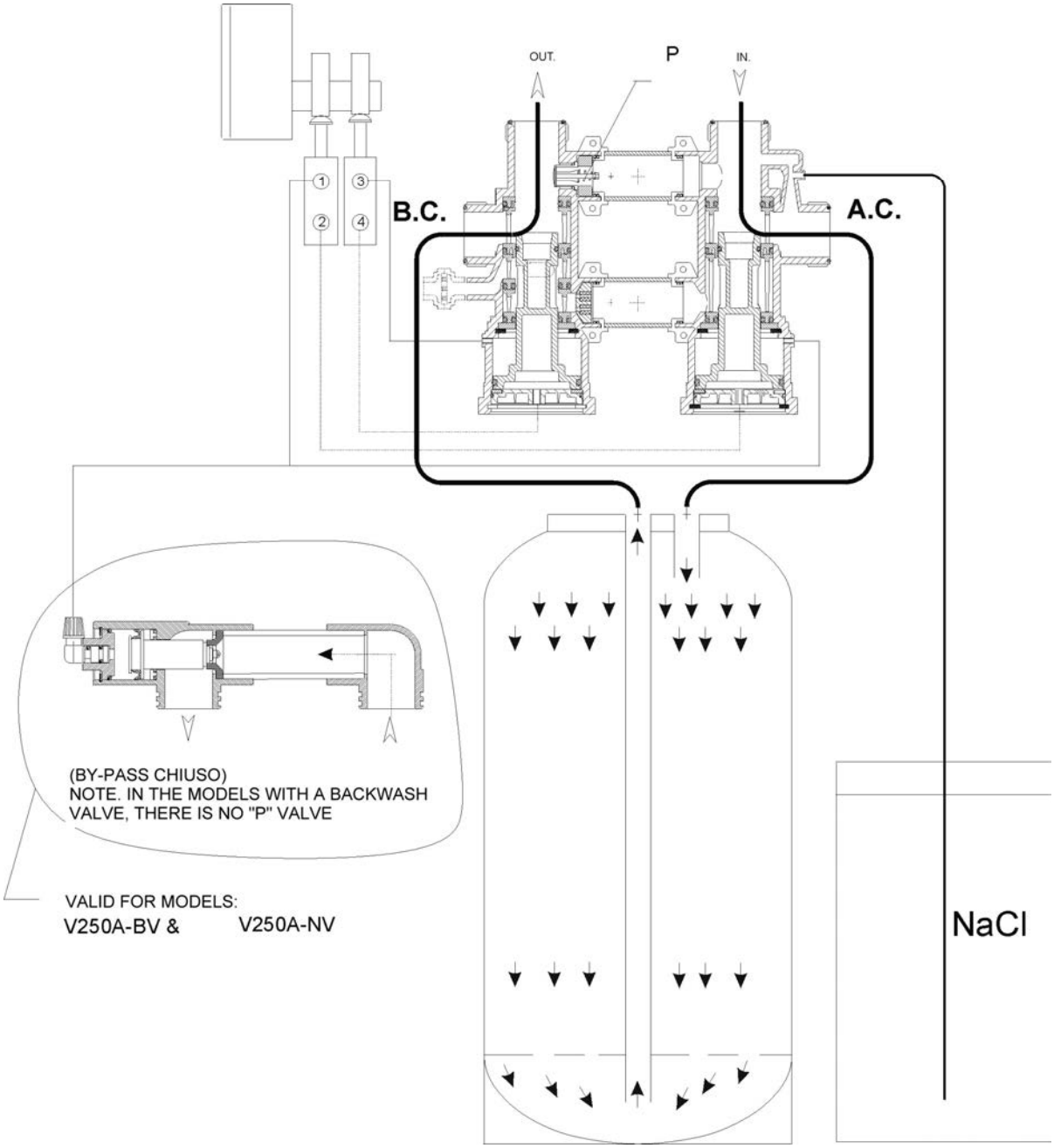

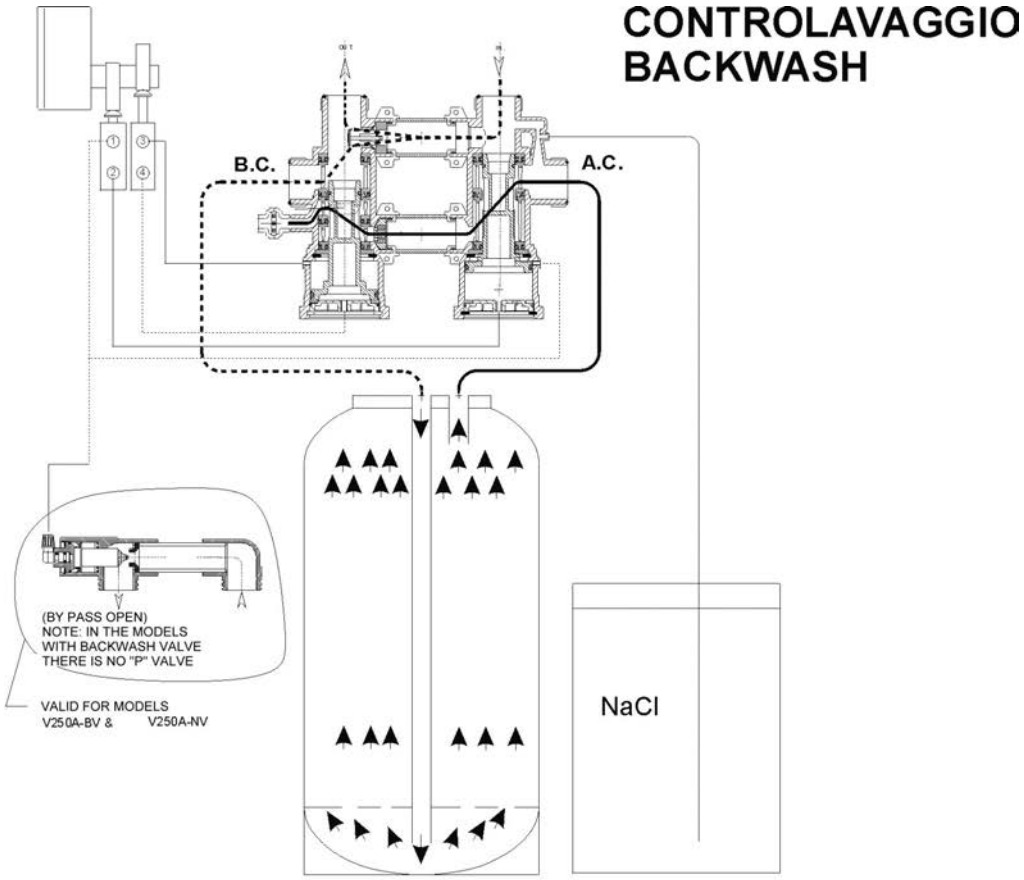
CONTROLAVAGGIO
BACKWASH
B.C.
A.C.
(BY PASS OPEN)
NOTE: IN THE MODELS
WITH BACKWASH VALVE
THERE IS NO "P" VALVE
VALID FOR MODELS
V250A-BV & V250A-NV
NaCl

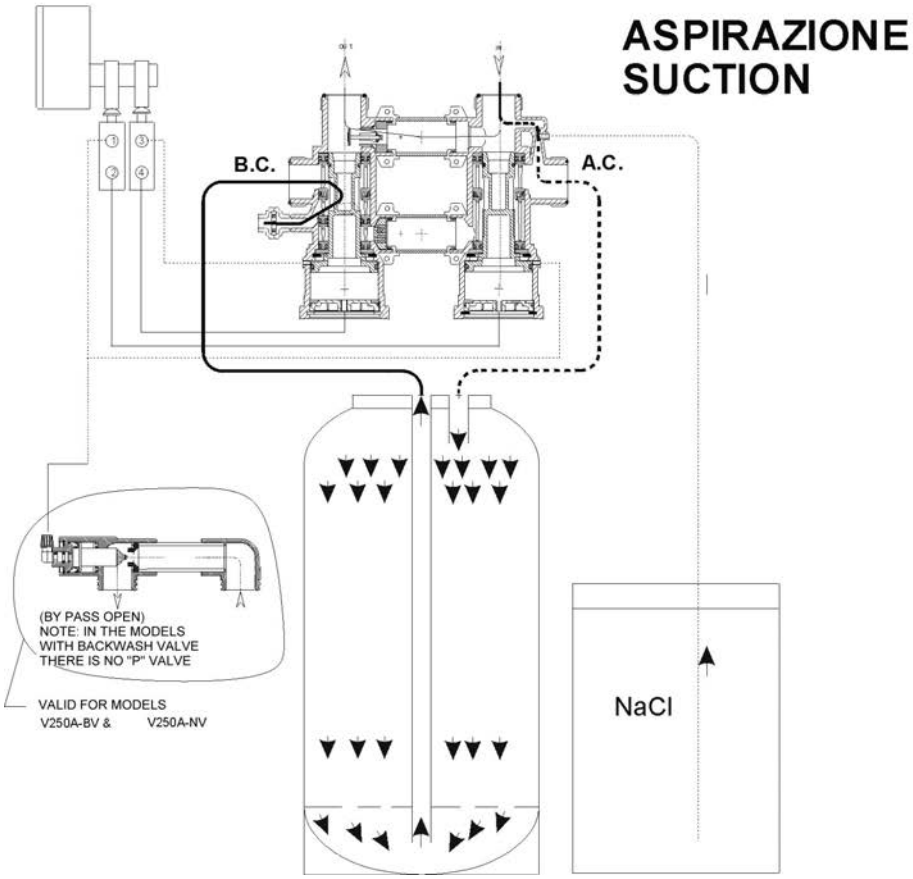
ASPIRAZIONE
SUCTION
B.C.
A.C.
(BY PASS OPEN)
NOTE: IN THE MODELS
WITH BACKWASH VALVE
THERE IS NO "P" VALVE
VALID FOR MODELS
V250A-BV & V250A-NV
NaCl

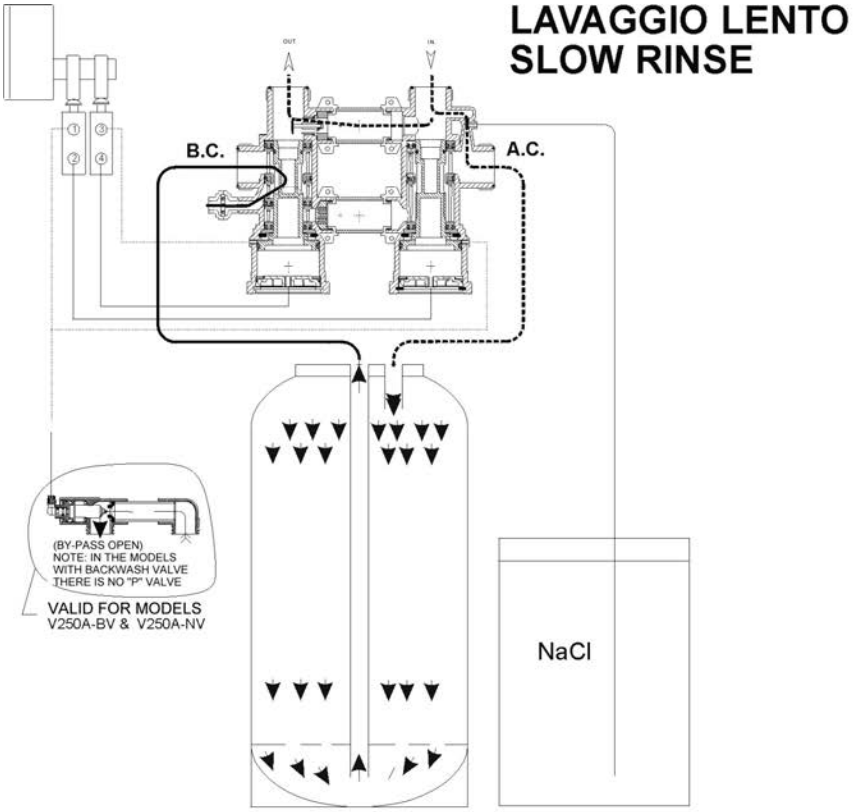
LAVAGGIO LENTO
SLOW RINSE
B.C.
A.C.
(BY-PASS OPEN)
NOTE: IN THE MODELS
WITH BACKWASH VALVE
THERE IS NO "P" VALVE
VALID FOR MODELS
V250A-BV & V250A-NV
NaCl

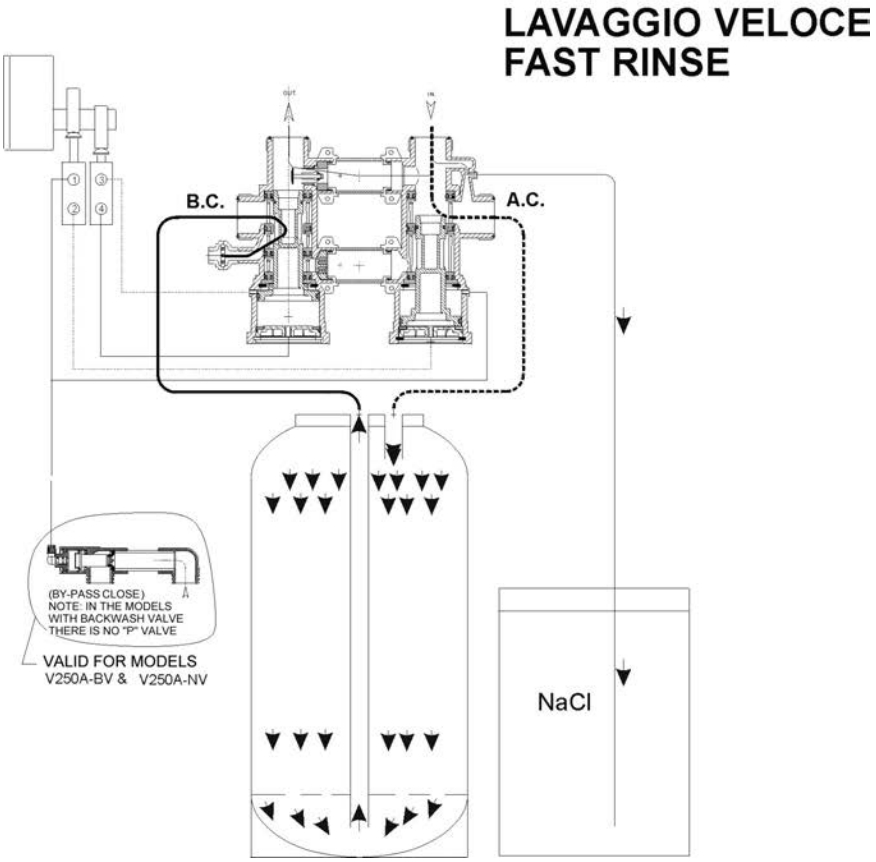
LAVAGGIO VELOCE
FAST RINSE
B.C.
A.C.
(BY-PASS CLOSE)
NOTE: IN THE MODELS
WITH BACKWASH VALVE
THERE IS NO "P" VALVE
VALID FOR MODELS
V250A-BV & V250A-NV
NaCl

VERSIONS

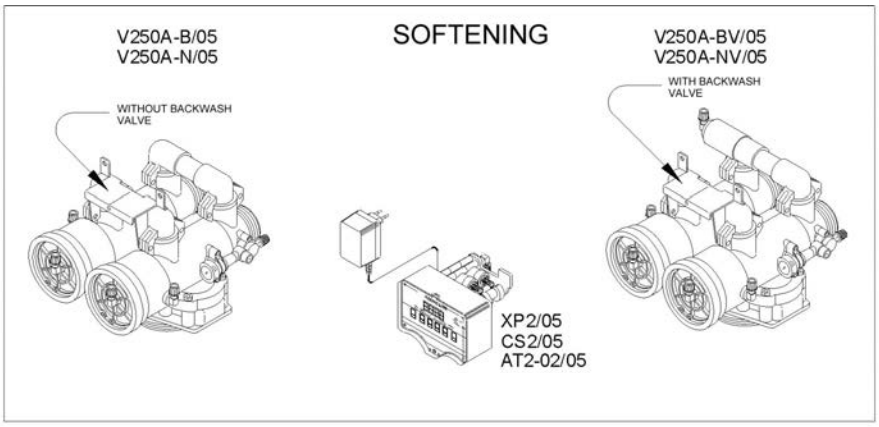
SOFTENING
V250A-B/05
V250A-N/05
WITHOUT BACKWASH VALVE
V250A-BV/05
V250A-NV/05
WITH BACKWASH VALVE
XP2/05
CS2/05
AT2-02/05

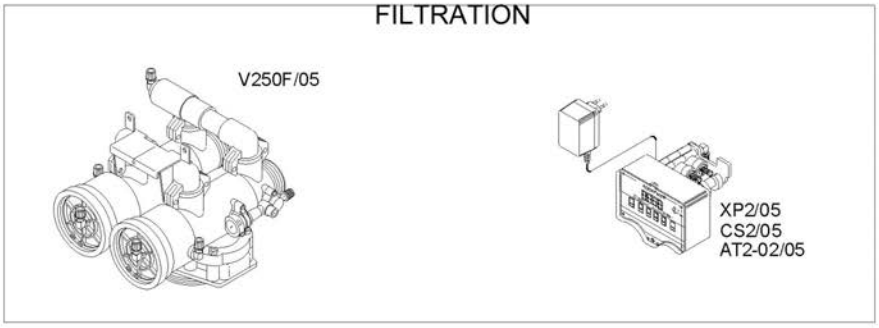
FILTRATION
V250F/05
XP2/05
CS2/05
AT2-02/05

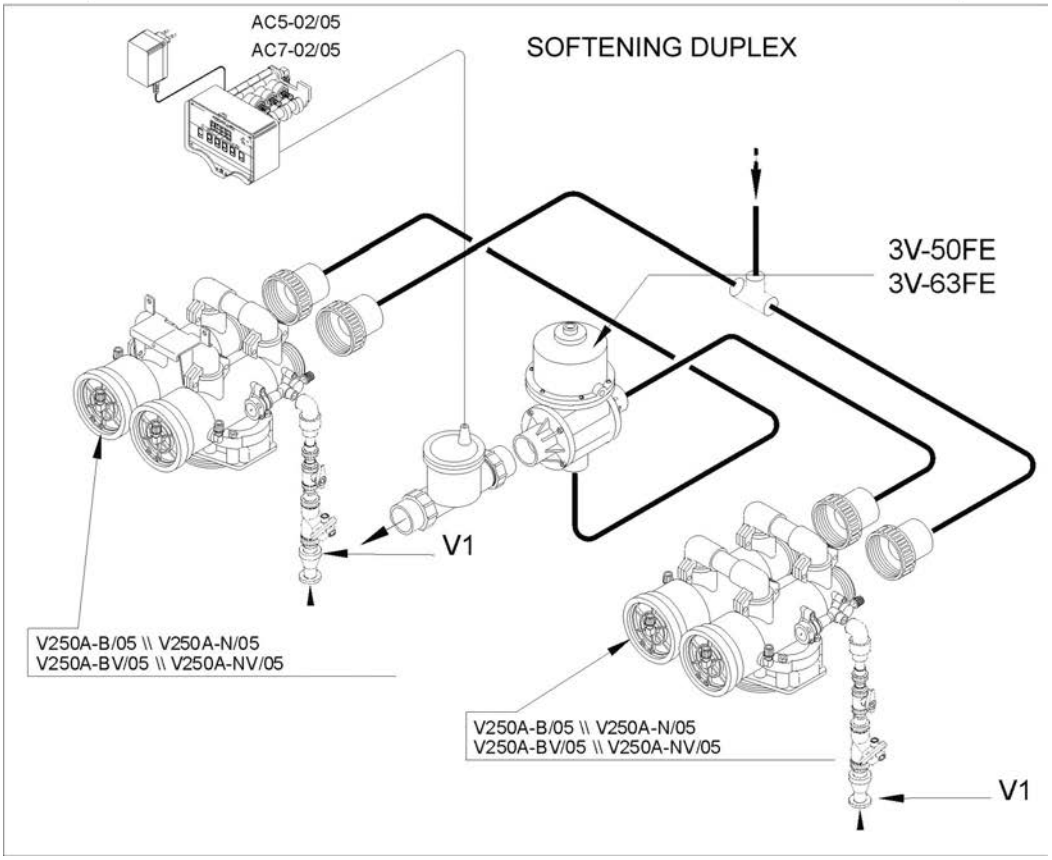
AC5-02/05
AC7-02/05
SOFTENING DUPLEX
3V-50FE
3V-63FE
V1
V250A-B/05 \\ V250A-N/05
V250A-BV/05 \\ V250A-NV/05
V250A-B/05 \\ V250A-N/05
V250A-BV/05 \\ V250A-NV/05
V1

USE SPECIFICATIONS

Referring to the paragraph VERSIONS seen above, the various possibilities for the uses of this valve in the various applications may be examinated.

1)Single softening: The system consists of a basic valve V250A (the question mark should be substituted with the colour of the required injector), and a timer complete with a minimum of 2 external pilots in different solutions, with which the system may be personalised as desired.

In particular, varying the number of external pilots, it is possible to obtain the following personalisations:

I. **2 pilots** controls only the movement of the pistons of the valve
II. **3 pilots** controls an additional use closure valve
III. **4 pilots** controls a use closure + a suction closure

2)Duplex: the system is made on two columns, each of which is run by a V250A valve. This is controlled, with water or air, by a timer with a minimum of 2 pilots per valve.
The alternating duplex systems (one column is in service while the other is in regeneration or not in use), may be controlled by the AQUA CUBIC timer, which may be supplied in two standard versions:

I. 5 pilots (**AC5-02/05**), run by volume. The system allows for the use of two brine valves plus a use closure valve
II. As a variation on this system, it is possible to substitute the two brine valves with two on-off hydro-pneumatic valves for the closing/opening of the suction duct(see the valve V1 page 10), using an AQUA CUBIC 7-pilot timer. (AC7-02/05)

3) Duplex o triplex softening:these are systems made on two or three columns, and may be controlled by ***HYDRAULIC DISTRIBUTORS*** connected to professional electronics. Thus, it is possible to produce highly complex systems, whilst maintaining a high standard of quality.

4) Filtration: the considerations made regarding softening are valid both for single and duplex systems, with the exception that in this case the suction of the regenerator does not need to be controlled.

.For further details regarding the timers, see the ***table of timer choice*** (page 23)

TIMER/ VALVE CONNECTIONS

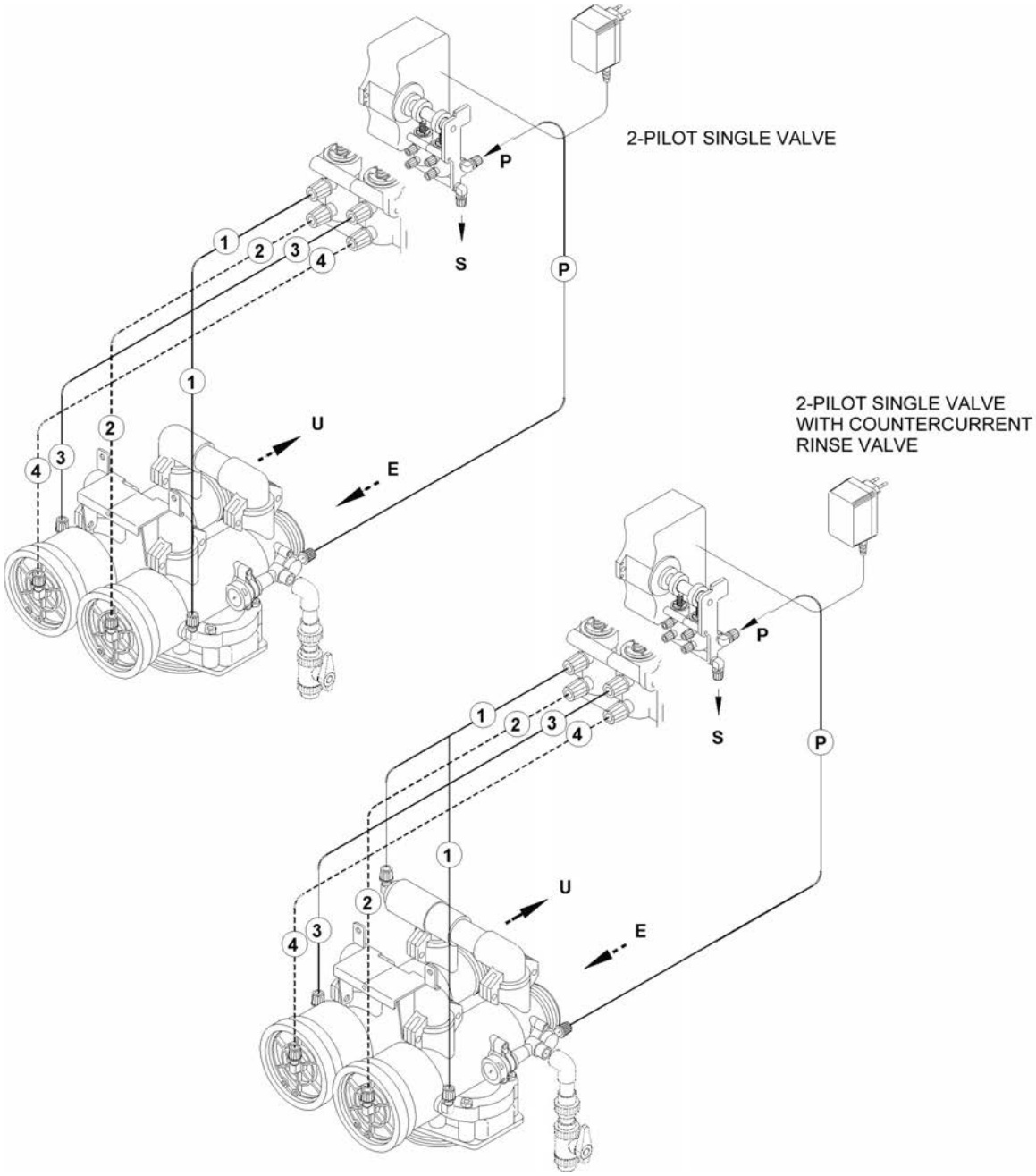

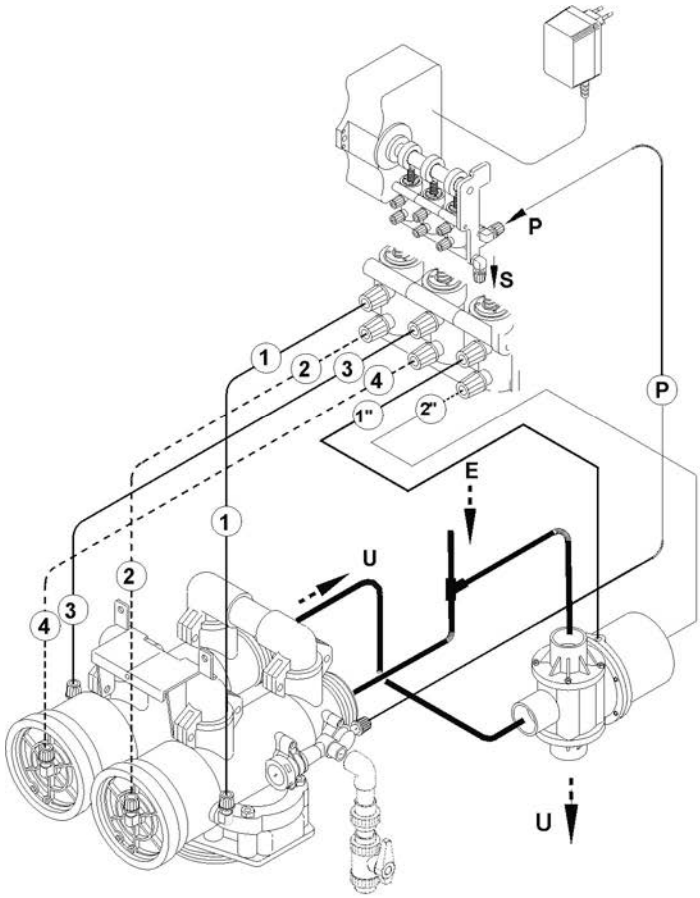

3-PILOT SINGLE VALVE
WITH EXIT AND BY-PASS
VALVE

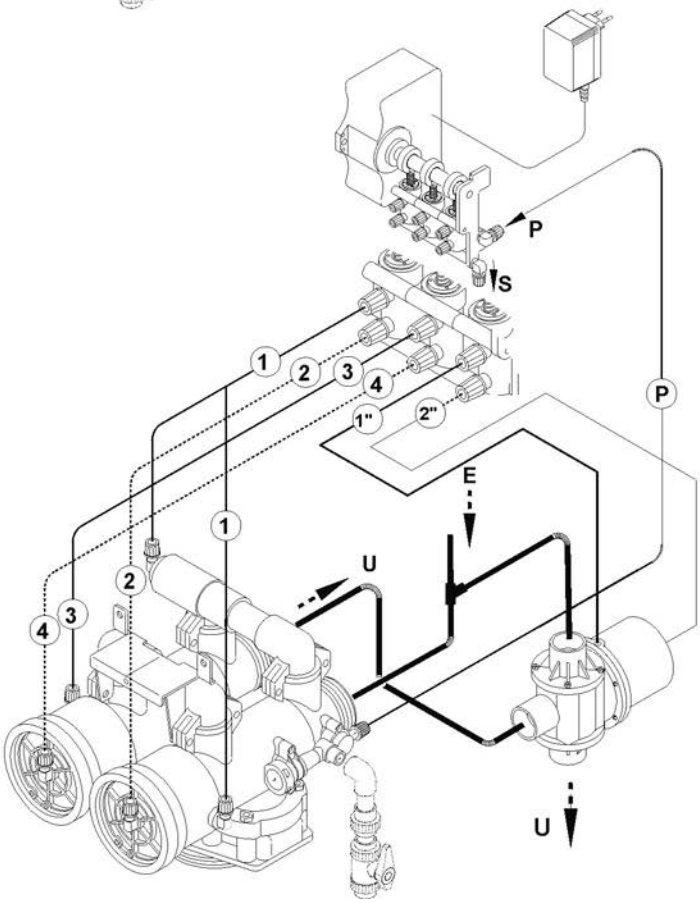

3-PILOT SINGLE VALVE
EXIT AND BYPASS VALVE
COUNTERCURRENT RINSE
VALVE

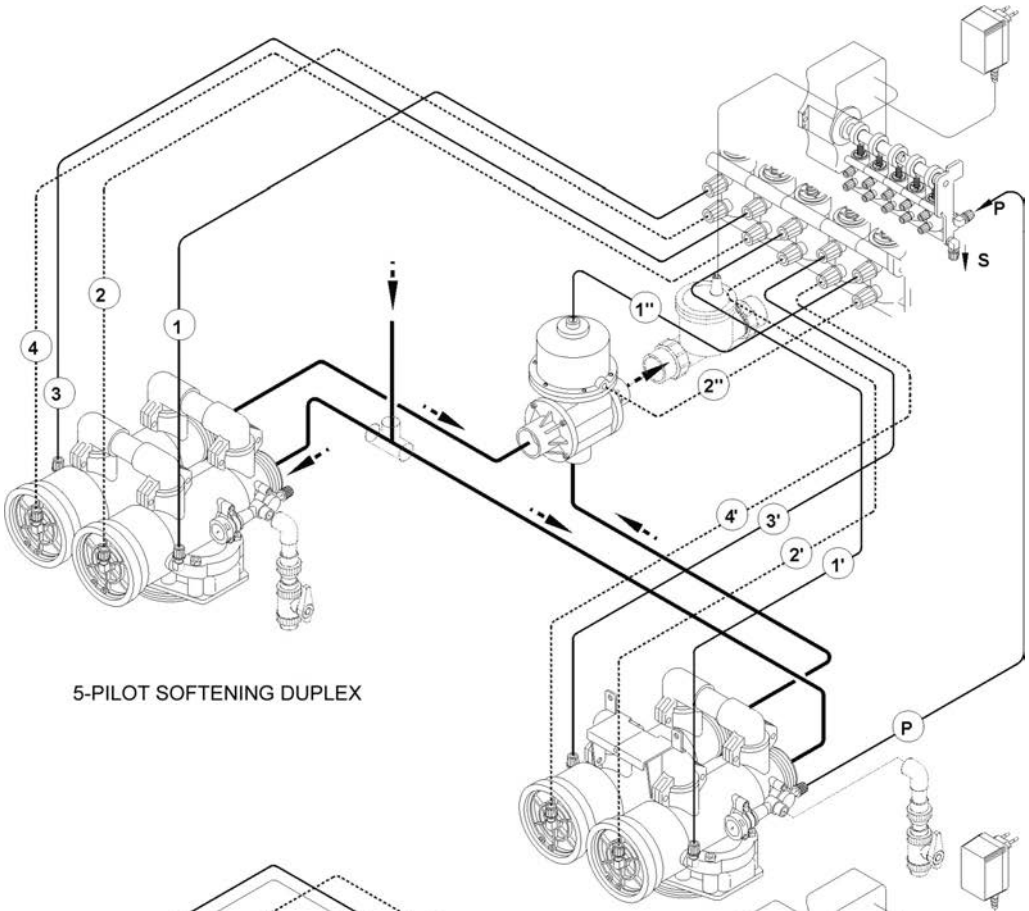

5-PILOT SOFTENING DUPLEX

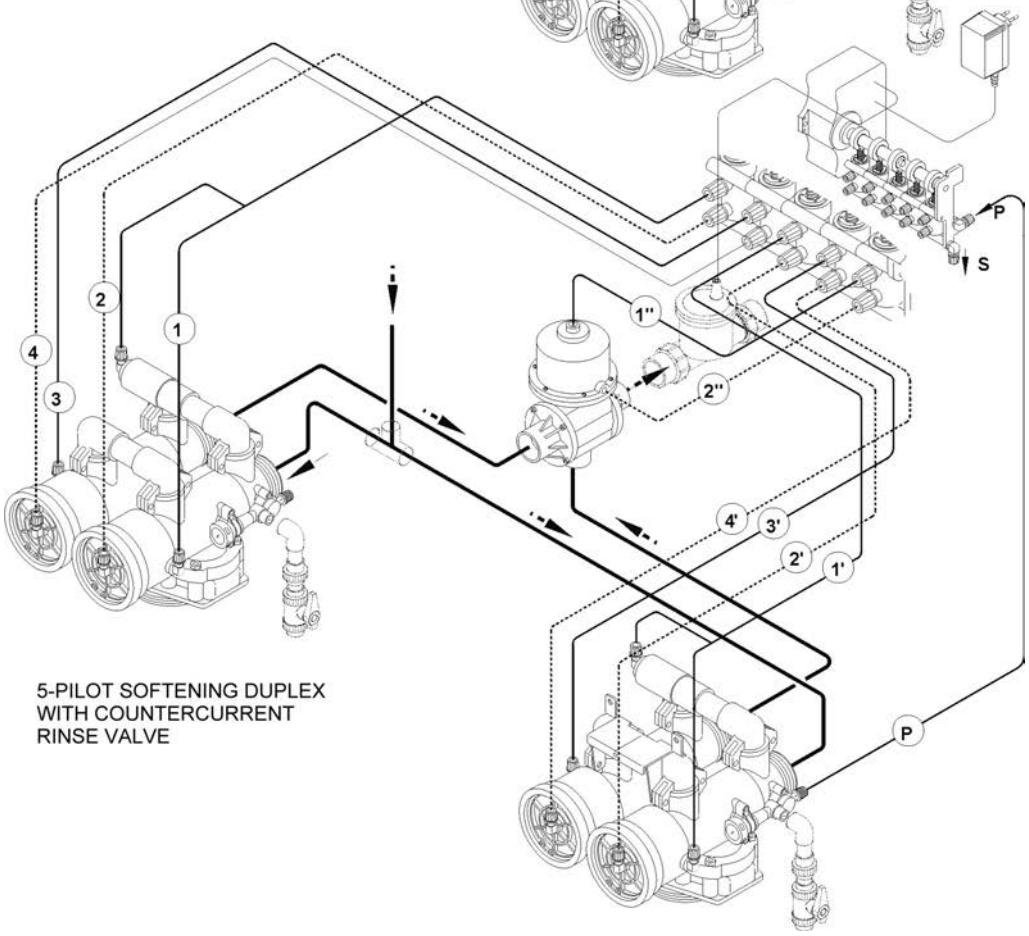

5-PILOT SOFTENING DUPLEX
WITH COUNTERCURRENT
RINSE VALVE

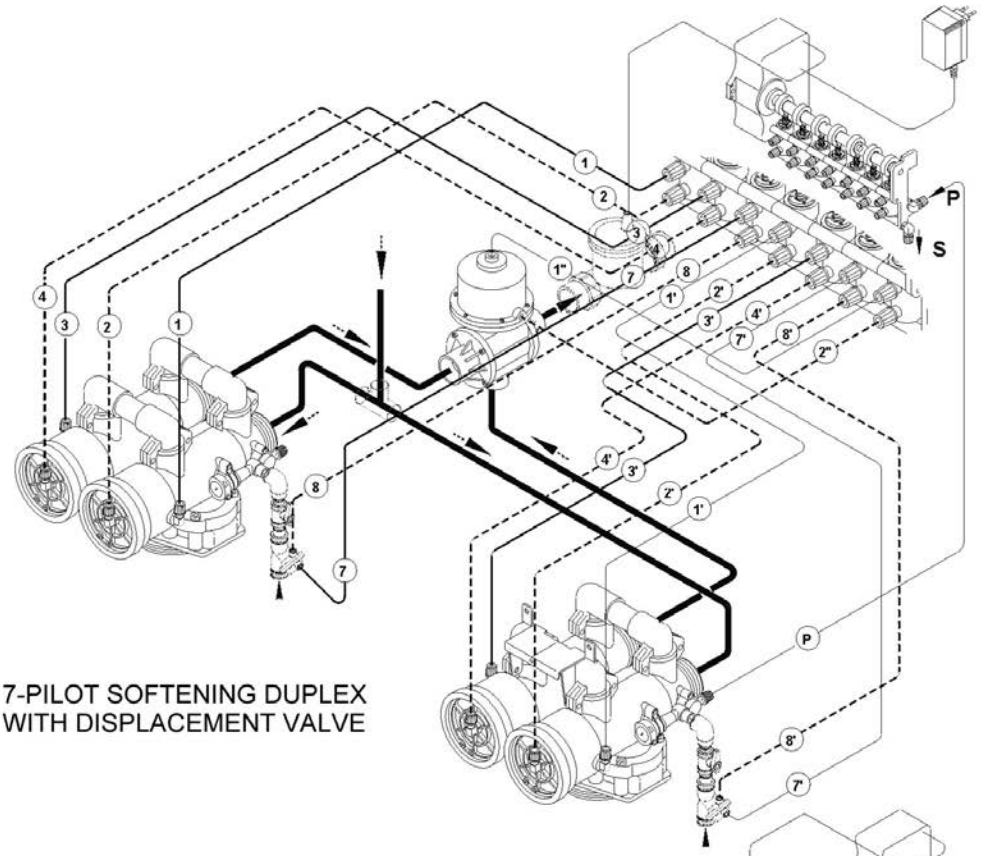

7-PILOT SOFTENING DUPLEX
WITH DISPLACEMENT VALVE

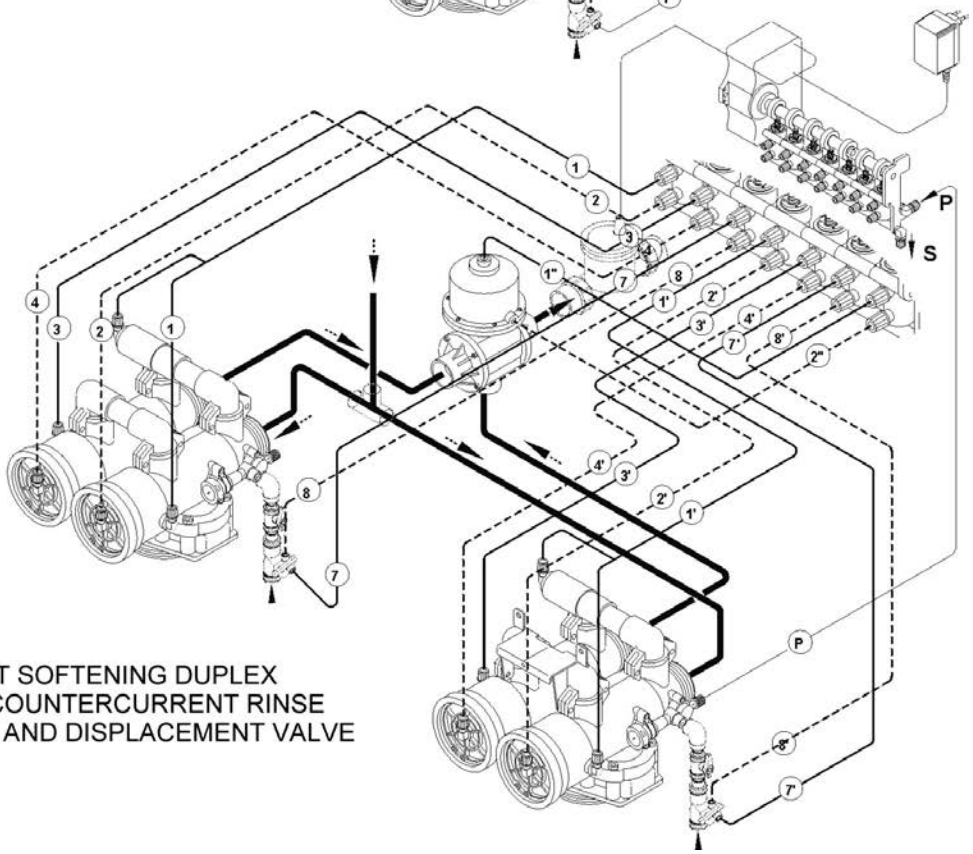

7-PILOT SOFTENING DUPLEX
WITH COUNTERCURRENT RINSE
VALVE AND DISPLACEMENT VALVE

FLOW CONTROL SYSTEMS

The S.I.A.T.A. flow control system is composed of 3 parts, see fig.1:

1. The flow delivery with 2 or 4 drill holes cod. 5124 or 5124-4
2. The flow cod. 70-* (with various dimensions)
3. The flow delivery cod 5228

In the solution proposed in fig.3, it may be operated easily as a drain flow control of a V250 valve using a normal adaptor Ø 40 ISO F – 1” ½ G.F.

The solution in fig.1 may be used instead as a flow control of the countercurrent, see fig.4. For the calculation of the load which are to be controlled, see the table below.

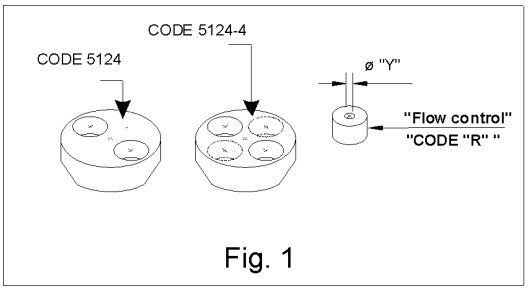

Fig. 1

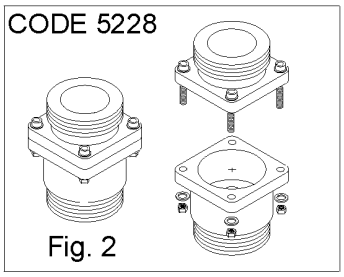

Fig. 2

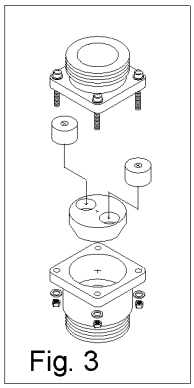
Fig. 3

FLOW CONTROL		FLOW TO DRAIN	
CODE "R"	mm Y	LT/H	G.p.m. US
070/1	3	320	1.41
070/2	3.5	480	2.11
070/3	4	700	3.08
070/4	5	950	4.18
070/5	6	1450	6.38

Fig. 4

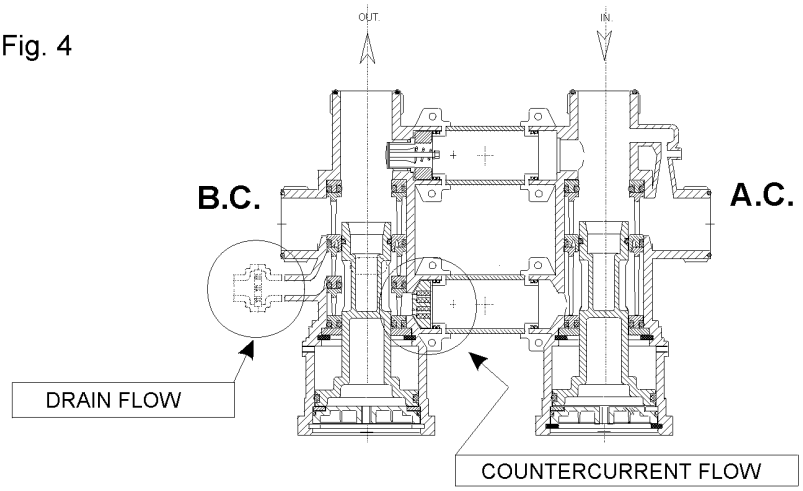

STANDARD COMPONENTS

BASIC VALVE STANDARD COMPONENTS

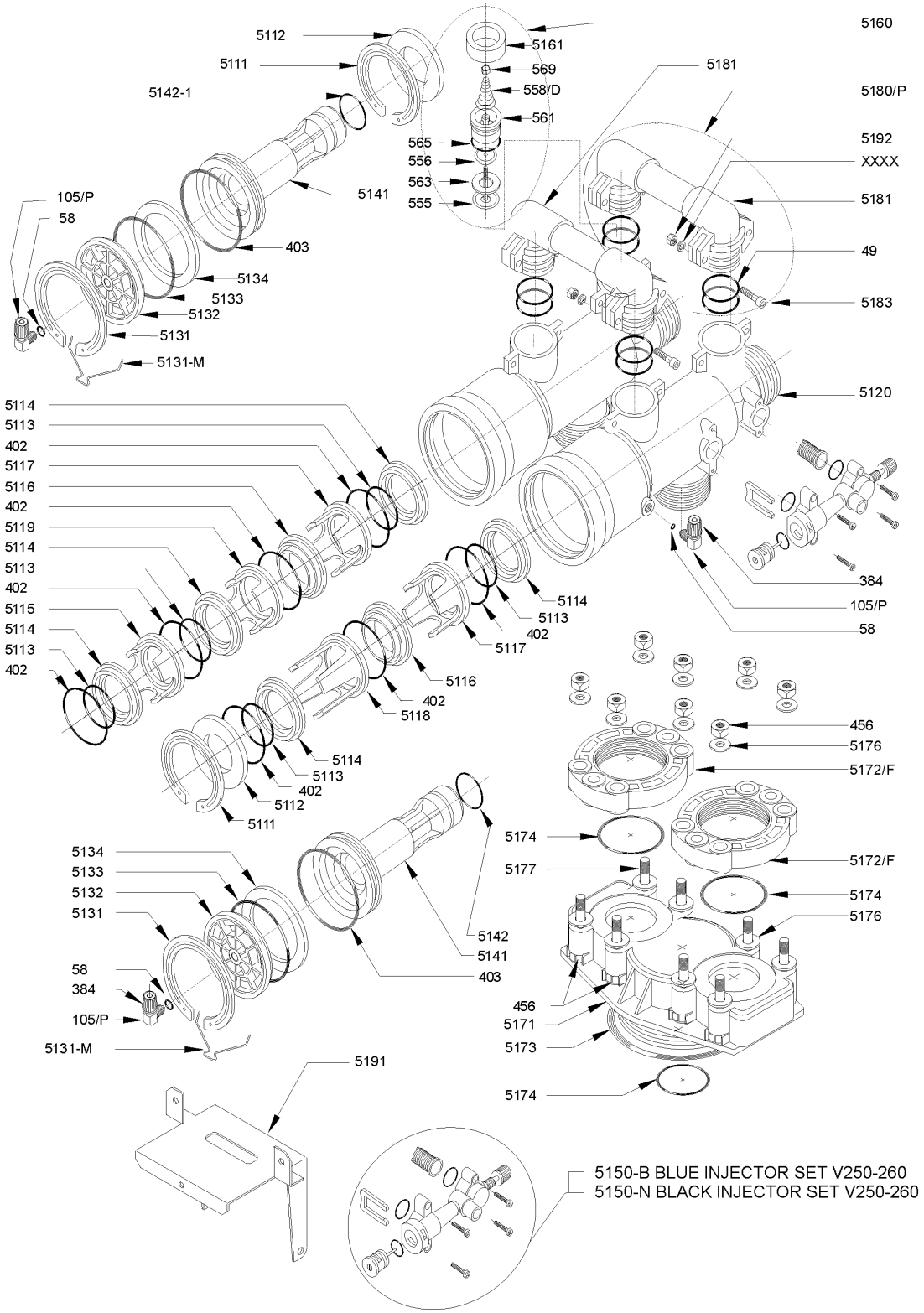

BASIC FILTER COMPONENTS

STANDARD COMPONENTS WITH
COUNTERCURRENT RINSE VALVE
AND FILTRATION

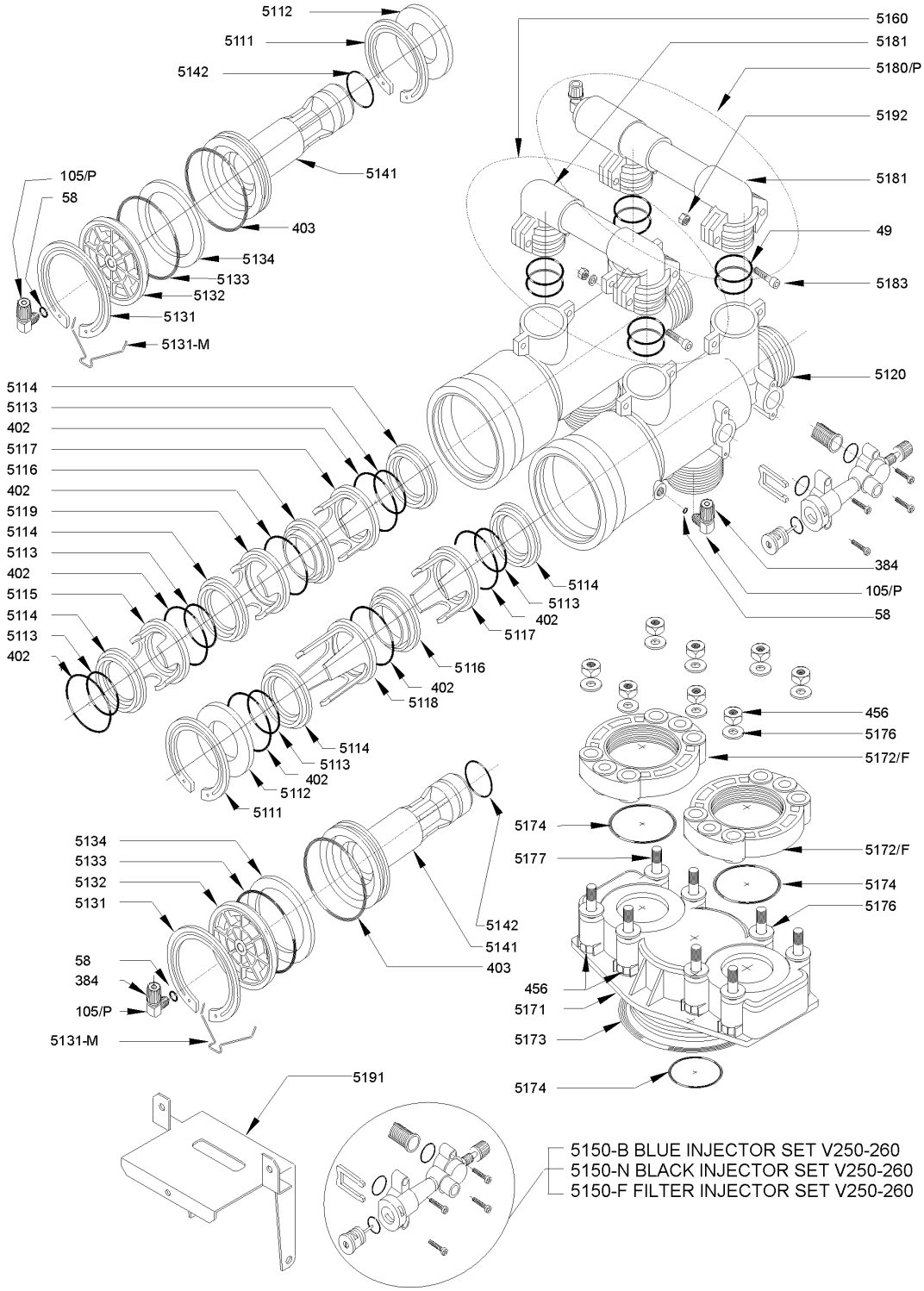

FILTER SPECIFICATIONS

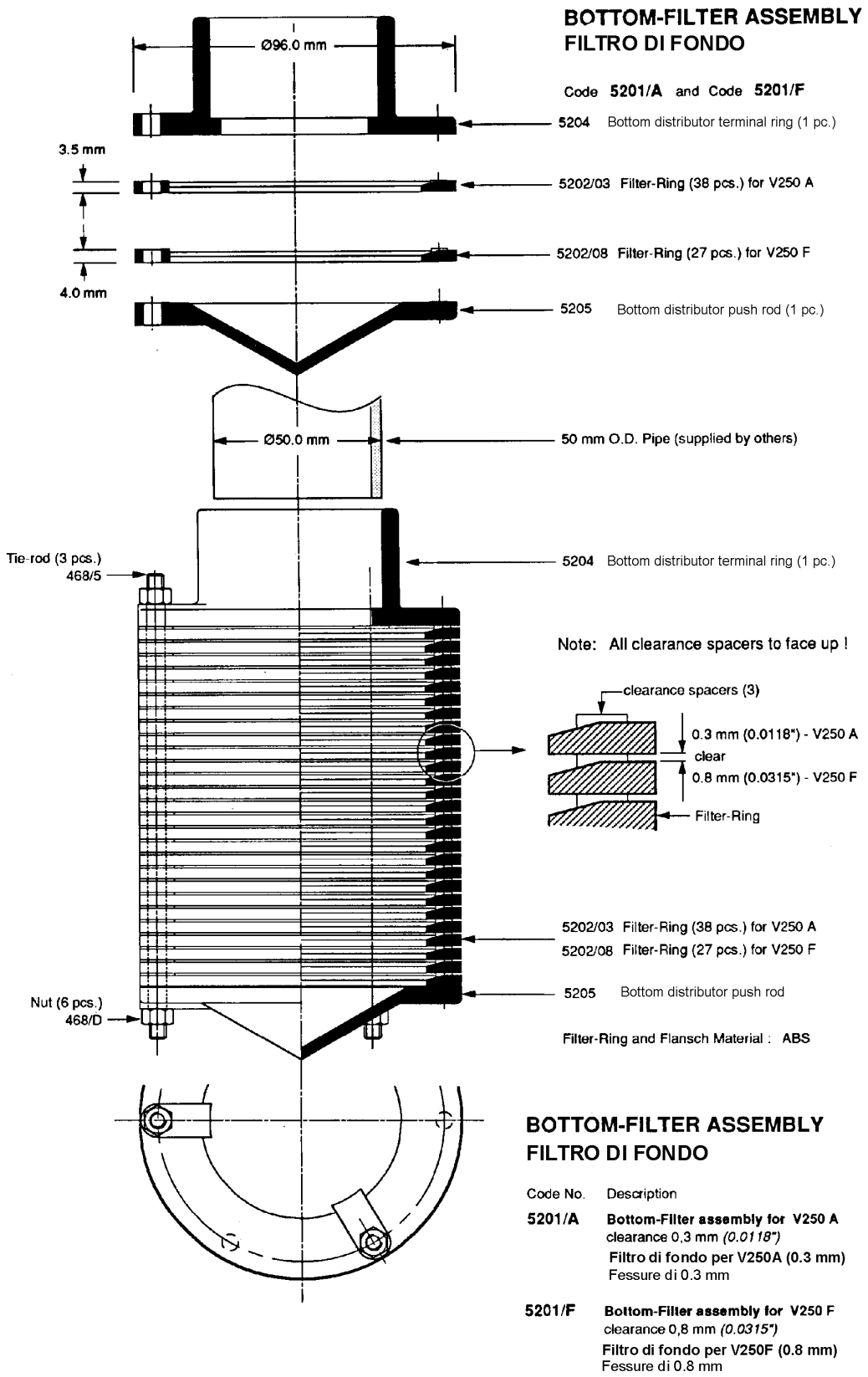

BOTTOM-FILTER ASSEMBLY
FILTRO DI FONDO

Code No.	Description
5201/A	**Bottom-Filter assembly for V250 A** clearance 0,3 mm *(0.0118")* **Filtro di fondo per V250A (0.3 mm)** Fessure di 0.3 mm
5201/F	**Bottom-Filter assembly for V250 F** clearance 0,8 mm *(0.0315")* **Filtro di fondo per V250F (0.8 mm)** Fessure di 0.8 mm

TOP-FILTER ASSEMBLY
FILTRO SOTTOVALVOLA

Code **5200/A** and Code **5200/F**

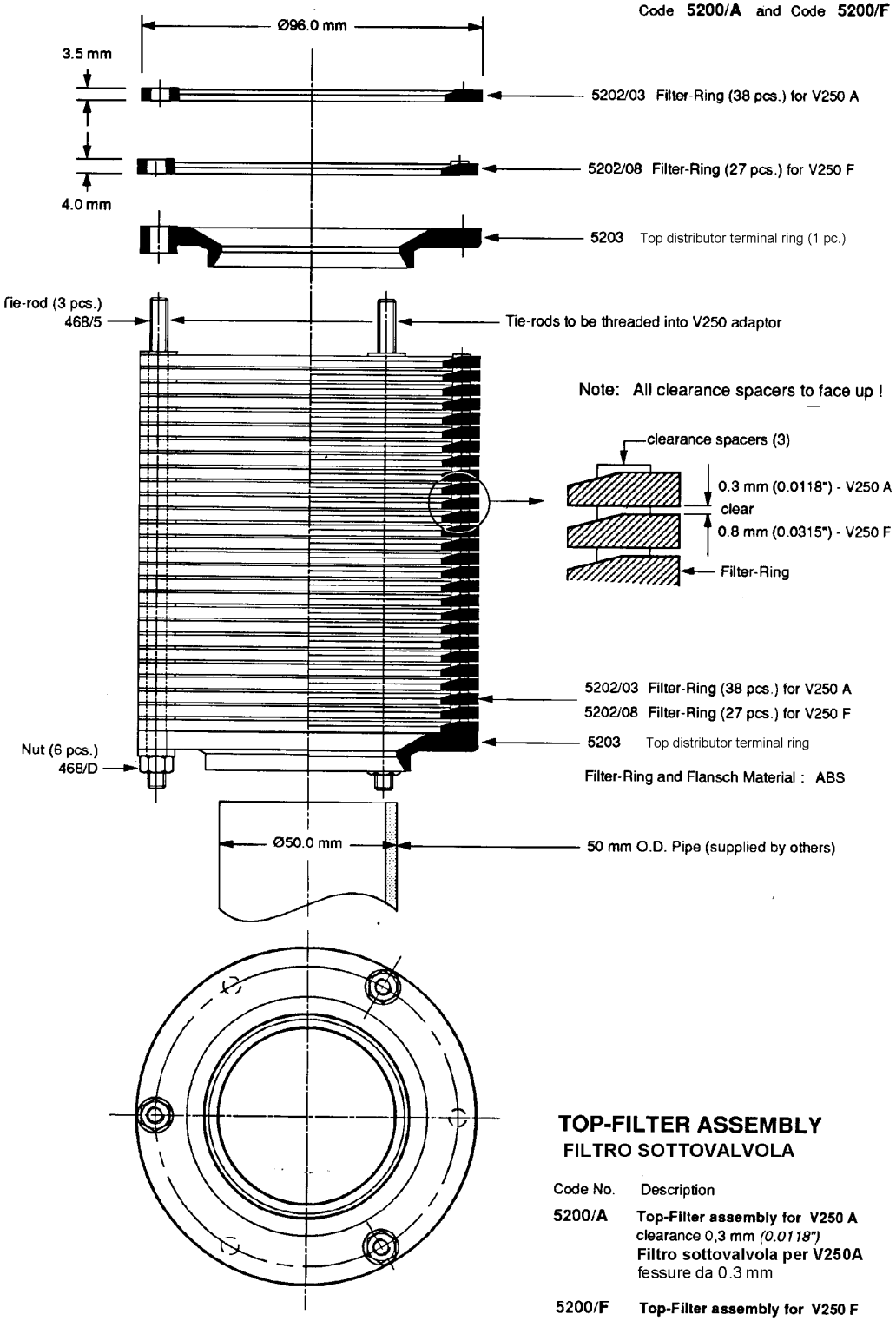

TOP-FILTER ASSEMBLY
FILTRO SOTTOVALVOLA

Code No.	Description
5200/A	**Top-Filter assembly for V250 A** clearance 0,3 mm *(0.0118")* **Filtro sottovalvola per V250A** fessure da 0.3 mm
5200/F	**Top-Filter assembly for V250 F** clearance 0,8 mm *(0.0315")* **Filtro sottovalvola per V250F** fessure da 0.8 mm

V250 INJECTORS

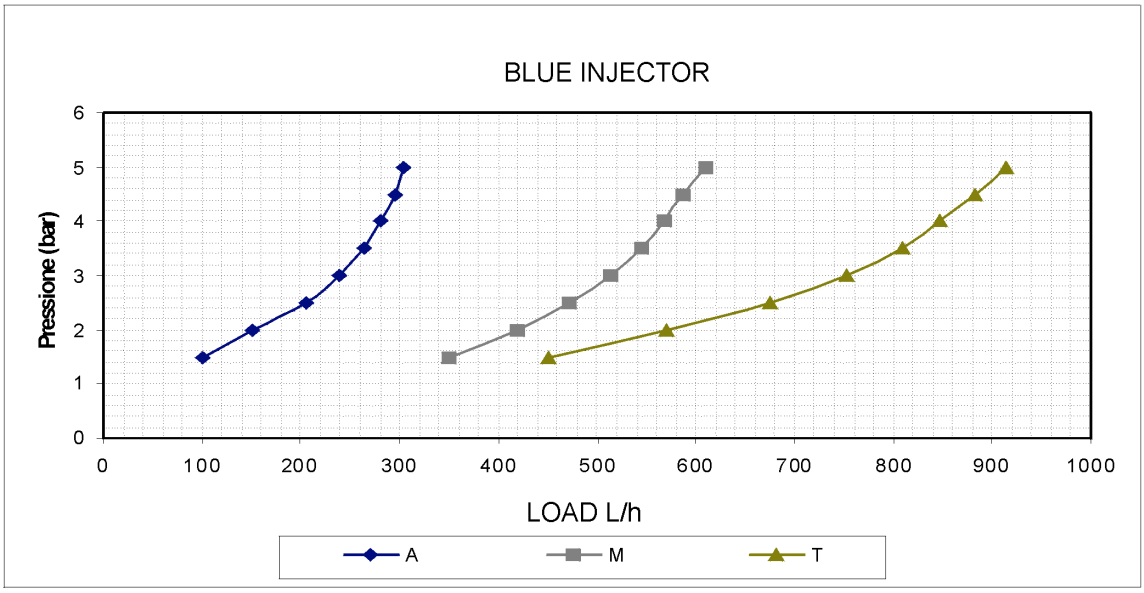

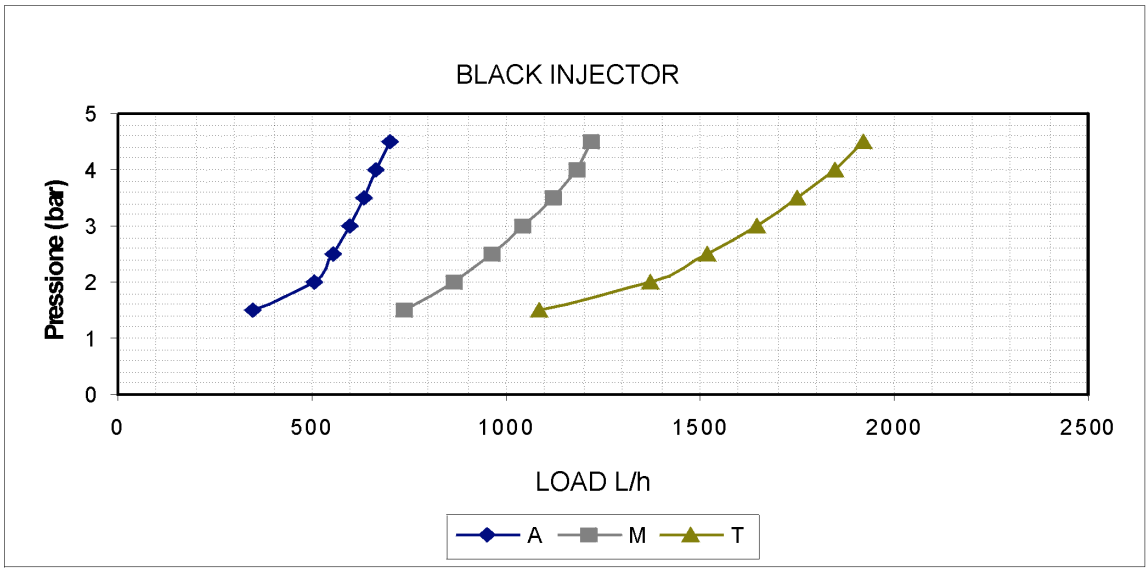

SERIES "A" Aspirazione / Suction
SERIES "M" Motrice / Motive
SERIES "T" Totale / Total

SPARE PARTS

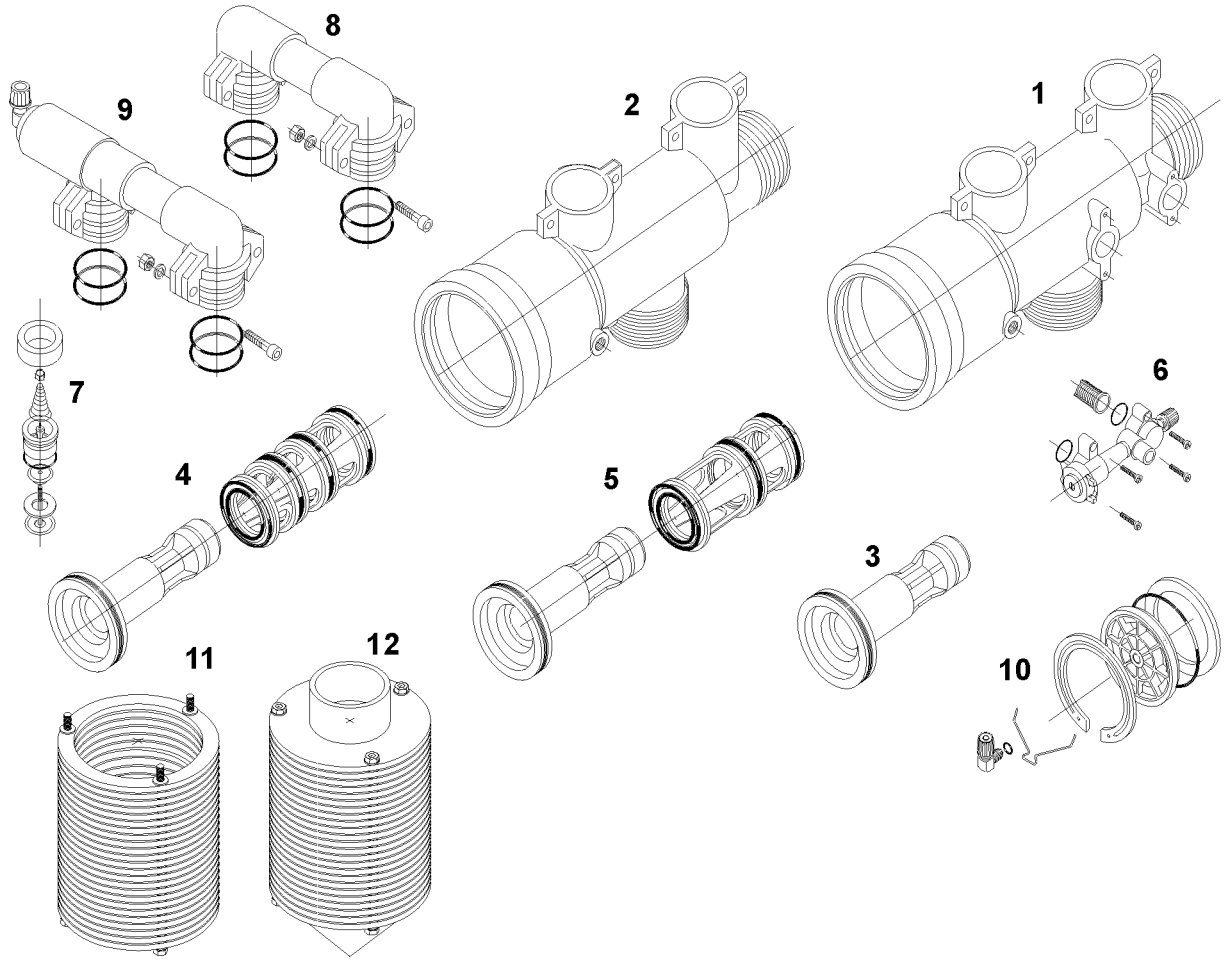

Pos.	Code	Description
1	5120-L	V250-V260 A/C machined body
2	5121-L	V250-V260 B/C machined body
3	5141	V250- 260 Piston
4	5110-AC	A/C V250 – 260 Lining set
5	5110-BC	B/C V250 – 260 Lining set
6	5150-B	V250- 260 Blu injector set
	5150-N	V250- 260 Black injector set
	5150-F	V250- 260 Filter injector set
7	5160	V250-260 Complete mobile valve set
8	5180-SC	V250 A/B Column ring set
9	5100-250	V250 Complete backwash valve
10	5130	V250-260 Stopper set
11	5200-A	Under valve filter for V250A (0.3 mm)
	5200-F	Under valve filter for V250F (0.8 mm)
12	5201-A	Base filter for V250A (0.3 mm)
	5201-F	Base filter for V250F (0.8 mm)

TIMER

THIS TABLE SHOWS A WIDE RANGE OF CONTROL TIMERS, TO USE IN CONJUNCTION WITH THE VARIOUS MODELS OF THE V250 VALVE, FROM THE SIMPLEST TIMERS, CONSISTING OF THE ELECTROMECHANICAL VERSIONS TO THE RANGE WHICH ALLOWS FOR THE MOST ADVANCED APPLICATIONS OF THE TIMER/VALVE SYSTEM TO REALISE WATER TREATMENT SYSTEMS OF THE MOST RECENT AND MODERN GENERATOTION.
THE V250 REQUIRES TIMERS WITH A MINIMUM OF TWO EXTERNAL PILOTS

			APPLICATION			TYPE OF VALVE					FUNCTION VARIABLES						
	DESCRIPTION	TIMER CODE	SOFTENING	FILTRATION		V250A		V250F			TIME CONTROL	VOLUME CONTROL	VOL/TIME CONTROL	DIN CONNECTION	CHLORINE PRODUCER	CONDUCTIBILITY CONTROL	CONNECTION CABLE VOL.CONT.
TIMER ELETTRONICI	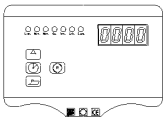 STANDARD ELECTRONIC CONTROLLER STANDARD ELECTRONIC TIMER WITH REGENERATION AT TIME SET FOR DAYS REQUIRED. REGENERATION DEPENDS ON THE CHOSEN SYSTEM SET.	CS2	●			●					●						
	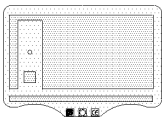 STANDARD PULSE TIMER ELECTROMECHANICAL PROGRAMMER WITH MANUAL START-UP OF REGENERATION, WITH THE POSSIBILITY OF REMOTE START-UP	SP2	●			●								1			
		SP2-08		●				●						1			
	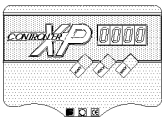 XP CONTROLLER TIMER ELECTRONIC PROGRAMMER WITH ADJUSTABLE REGENERATIONS TIMES, REGENERATION START-UP BY TIME OR VOLUME WITH DELAYED OPERATION. MANUAL START-UP AVAILABLE	XP2	●	●		●		●			●						
		XP2-01	●								●	●					●
	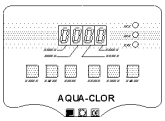 AQUA-CLOR TIMER ELECTRONIC PROGRAMMER WITH ADJUSTABLE REGENERATIONS TIMES, REGENERATION START-UP BY VOLUME AND BY TIME WITH DEFERRED START-UP. EEPROM MEMORY. CHLORINE PRODUCER. REMOTE STARTER ON REQUEST.	ACL2	●			●					●				●		
		ACL2-01	●								●	●	●		●		●
	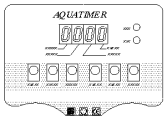 AQUA-TIMER TIMER ELECTRONIC PROGRAMMER WITH ADJUSTABLE REGENERATION TIMES, REGENERATION START-UP BY TIME/VOLUME, VOLUME WITH DEFERRED START-UP. REMOTE STARTER AVAILABLE	AT2	●	●		●		●			●						
		AT2-01	●								●	●	●				●
		AT2-02	●			●					●	●	●				
	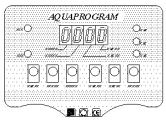 AQUAPROGRAM TIMER ELECTRONIC PROGRAMMER WITH ADJUSTABLE REGENERATION TIMES, REGENERATION START-UP BY TIME/VOLUME WITH DEFERRED START-UP. OPTIMISES AND CONTROLS THE REGENERATION CYCLE, PUMP OR OTHER ELEMENT CONTROL AVAILABLE REMOTE STARTER, INHIBIT ENTRY, EEPROM MEMORY. CHLORINE PRODUCER ON REQUEST (PATENT S.I.A.T.A.)	AP2-02	●			●					●	●	●	2		●	
	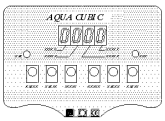 AQUA CUBIC TIMER ELECTRONIC PROGRAMMER WITH ADJUSTABLE REGENERATION TIMES. POSSIBILITY FOR DUPLEX REGENERATION USE. REGENERATION START-UP BY VOLUME. EEPROM MEMORY	AC5-02	●			●					●	●	●	1			
		AC7-02	●			●					●	●	●	1			

MAINTENANCE ADVISE

Problem	Cause	Corrective action
Drain leaking while in service or on stand-by	Pilot leakage	Disconnect alternately connections 2 and 4, see page 12.If water is leaking from one of the two pressure connections, this means that the relative pilot has leaks and should be replaced. If the leakage does not come from the pilot, the cause should be sought, possibly originating from the head of the V250 piston.
	Leakage on the drain of the valve	Disconnect one by one the connections 1 and 3, see page 12 ; if the leaking stops check that the O-rings pos.A,B,C and D are undamaged . Check for any scratches on the piston.
Maintenance of the two chambers A/C and B/C		**A)** Turn off the entry water **B)** Disconnect the pilot pipes of the two pistons **C)** Remove the seeger ring from the stopper, using the special pliers **D)** Remove the stopper or the relative O-ring **E)** Extract the piston using 2 pliers, with which to take hold of the two lateral grooves to be found at the base of the piston. If the operationis still difficult, try to loosen the external connecting reduction adaptor (entry or exit) **F)** Remove the seeger ring fitting nut plastic screw **G)** Remove the plastic screw and the whole set of the distancers from the chamber. In order not to lose the consequence, the removed pieces should be piled up inside the up-turned piston **H)** Check that the inside of the chamber and the various O-rings are undamaged **I)** Reassemble everything taking care when positioning the two seegers,particularly the one with the stopper which must be put in place slightly forcing the expansionwith the pliers, and checking that the safety device iscorrectly positioned. The seeger should however be replaced each time maintenance is carried out.
Fughe di durezza all'uscita	Possible leak between entry and exit or on AB/BC	1. Check that the mobile valve is undamaged (pos. E) 2. On the models with the countercurrent valve, check that the seal is undamaged (pos.F)
Suction failure	Injector / drain	Case 1 (air suction) :Check the salamoia valve Case 2 (Injector sends water back) : ✓ The drain does not work because it is obstructed or because there is too much pressure after the drain ✓ The injector is obstructed ✓ If the two points above have occurred, check that the resin is not impacted under the below-valve filter.
Suction during countercurrent	Excessive drain load	Check that the flow controls assembled on the drain are adequate for entry pressure and load.